ECN/R #:

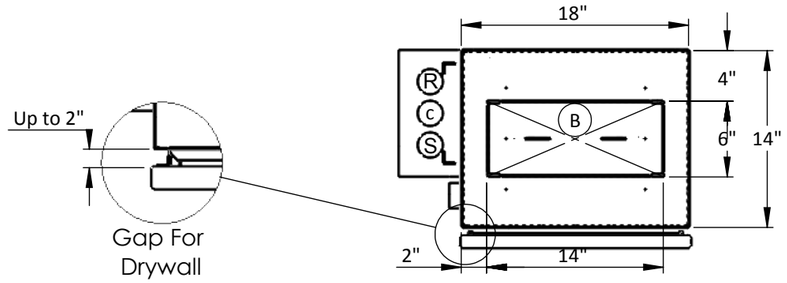

Top View (Left Hand Riser Position)

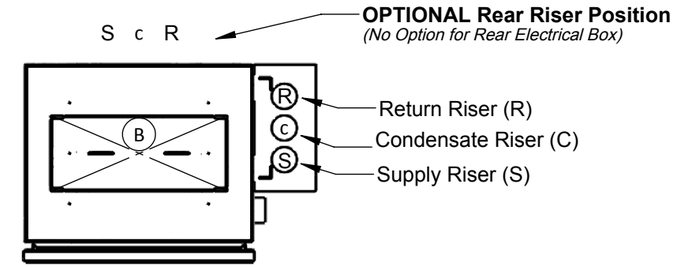

TOP VIEW (Right Hand Riser Position)

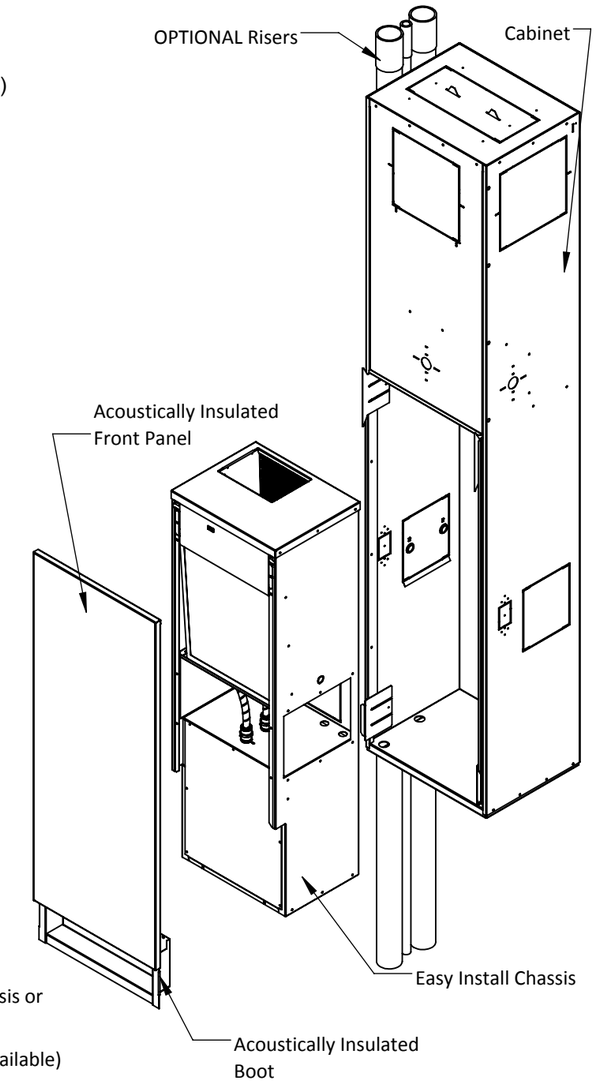

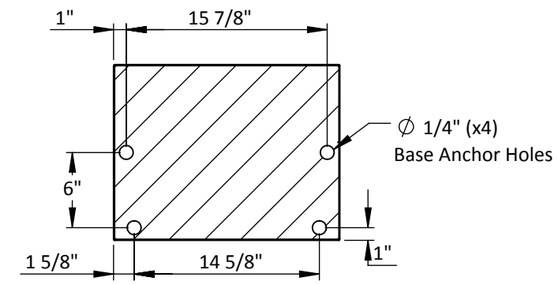

SECTION A-A

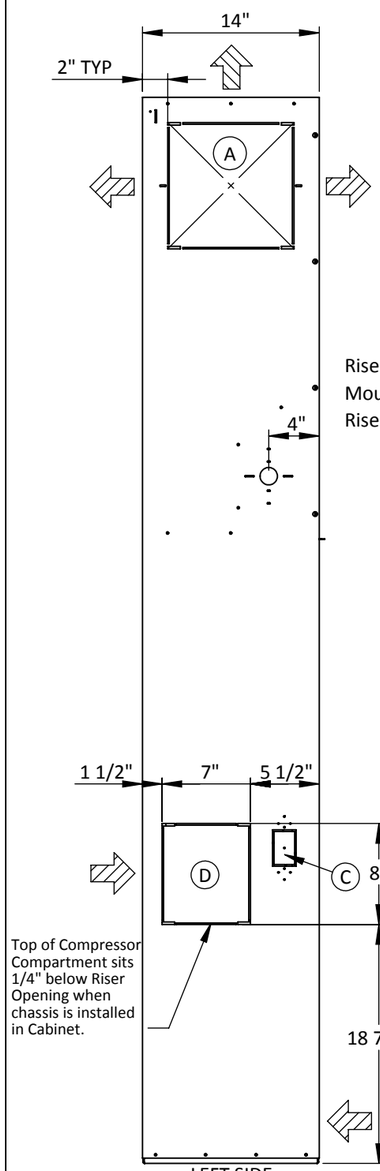

LEFT SIDE
(MIRRORED RIGHT SIDE)

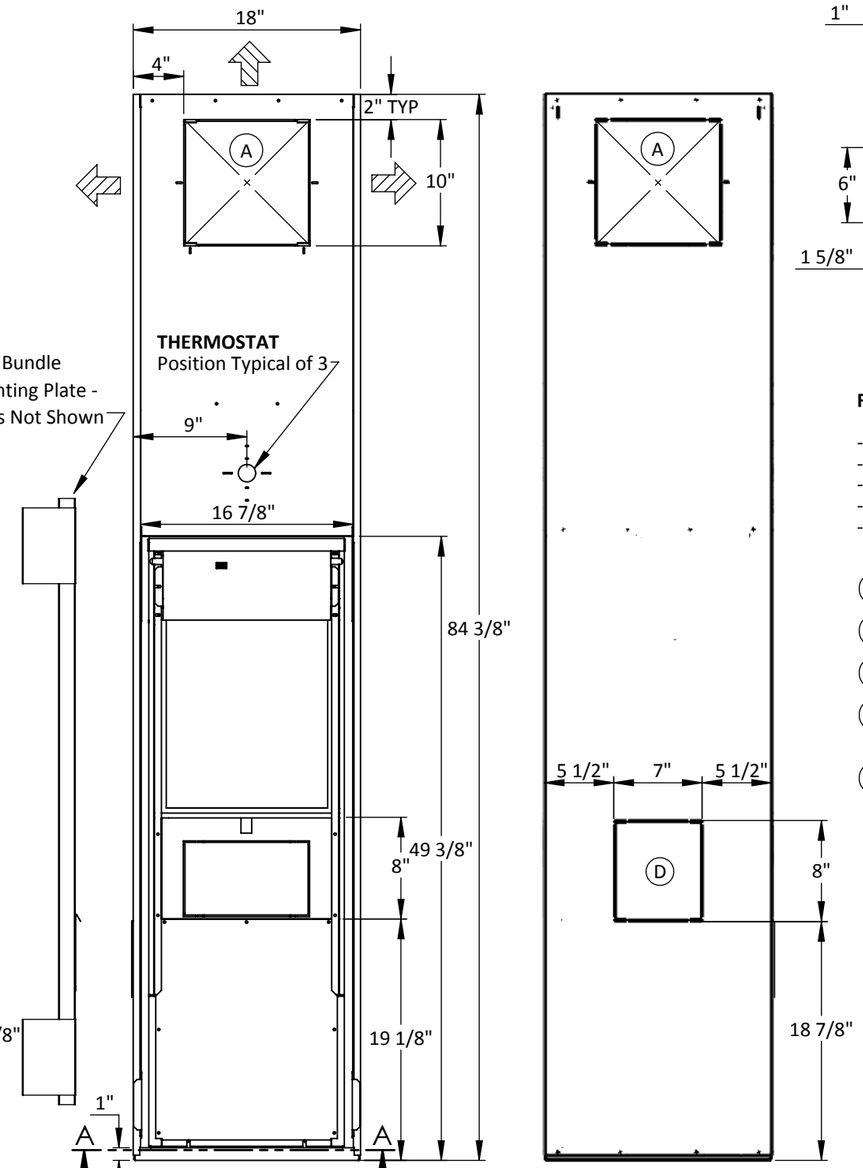

UNIT FRONT

UNIT BACK

REMARKS:

-> Arrows toward unit show RETURN option.
-> Arrows away from unit show SUPPLY option.
-> Water Inlet / Outlet = 1/2" MPT.
-> Condensate Drain = 3/4" ID Hose.
-> Wire frame filter included (14"x16.75")

(A) - 10" x 10" KnockOuts for Supply Ducting

(B) - 14" x 6" KnockOuts for Supply Ducting

(C) - Electrical Box KnockOut for Electrical Connections

(D) - KnockOut For Flex. Hose Connection of Risers to Chassis or for Return Air

(E) - Optional Cabinet Base Extensions (Various Heights Available)

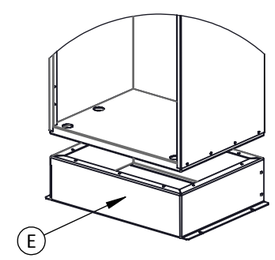

BULLDOG HEAT PUMP

	NAME	DATE (MM/DD/YYYY)
DRAWN	MRH	9/9/2015
CHECKED		
ENG APPR.	FL	9/22/2015
REV.		
Q.A.		

COMMENTS:

DO NOT SCALE DRAWING

UNLESS OTHERWISE SPECIFIED:
DIMENSIONS ARE IN INCHES
TOLERANCES UNLESS OTHERWISE NOTED ARE:

FRACTIONAL	± 1/16"
ANGULAR	± 0.5°
.X:	± .1"
.XX:	± .06"
.XXX:	± .032"
.XXXX:	± 0050"

InnKeeper Univeral

BULLDOG IKV008-018 Universal Cabinet Submittal

SIZE	DWG. NO.	REV.
A	IKV_UNI_DD	B

SCALE: NTS | WEIGHT: | SHEET 1 OF 1

Last saved on: April-25-16; In the interest of continuous improvement, drawing subject to change without notice.