ECN/R #:

CONFIGURATIONS POSSIBLE

Arrangement #1

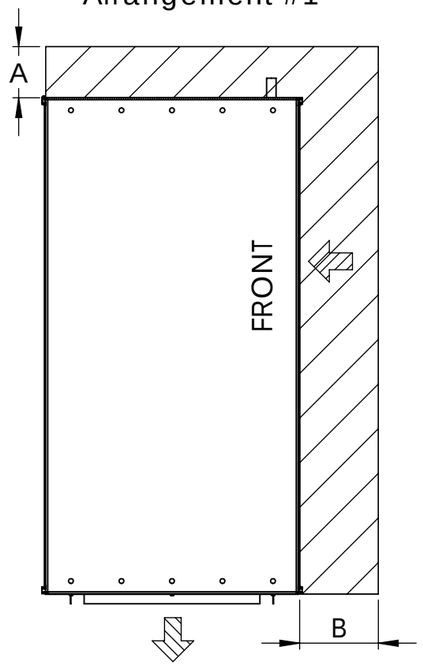

Front Return/Left Supply

Arrangement #2

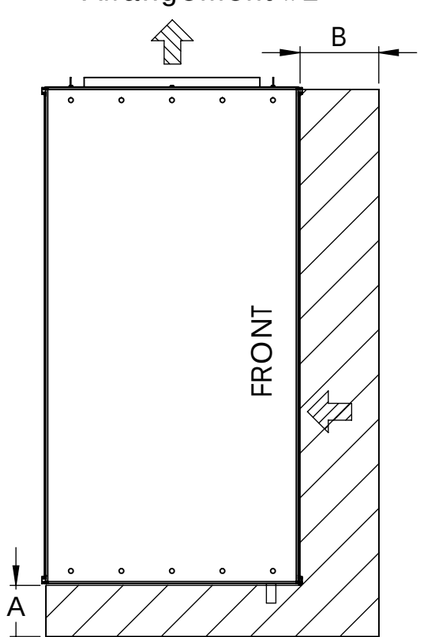

Front Return/Right Supply

PHYSICAL DATA (in)	
SUPPLY AIR, W x H	RETURN AIR, W x H
16" x 10"	20" x 12"
CLEARANCE DIMENSIONS (in)	
A	6"
B	20"

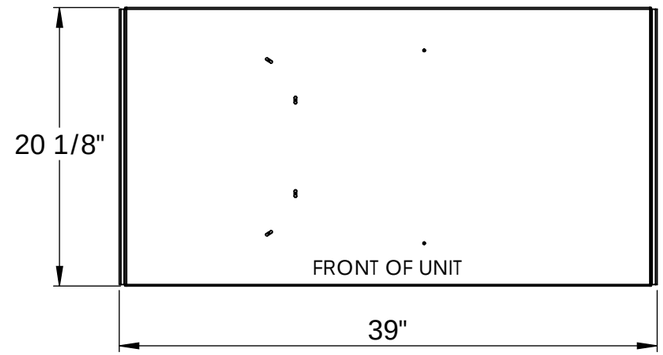

TOP VIEW

NOTES:
1. Water Inlet, 1/2" FPT
2. Water Outlet, 1/2" FPT
3. Condensate Drain, 3/4" Tube
4. High Voltage Power Cord
5. Control Panel Cover
6. Disposable Fibre Glass Filter, 12" x 20" x 1"

REMARKS:
i. Drain Pan is under positive pressure. Trap not required
ii. Front Return / Left Supply arrangement is shown.
iii. For proper services of the refrigerant circuit, the unit should be lowered to ground level and the top panel should be removed.
iv. This unit is a Blow Through unit instead of CGC Group's standard Draw Through unit.

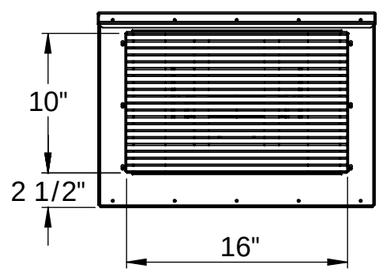

LEFT SIDE VIEW

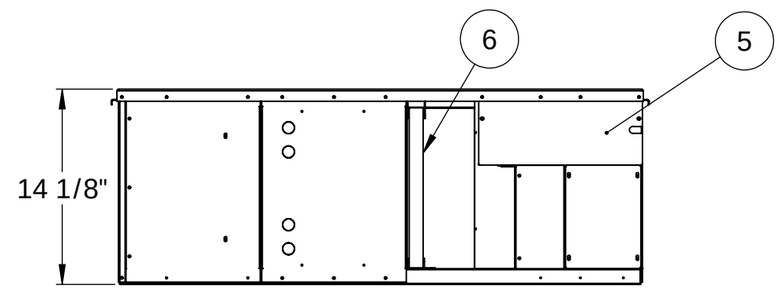

FRONT VIEW

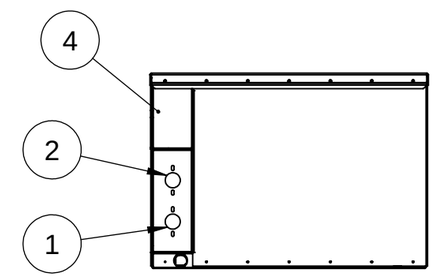

RIGHT SIDE VIEW

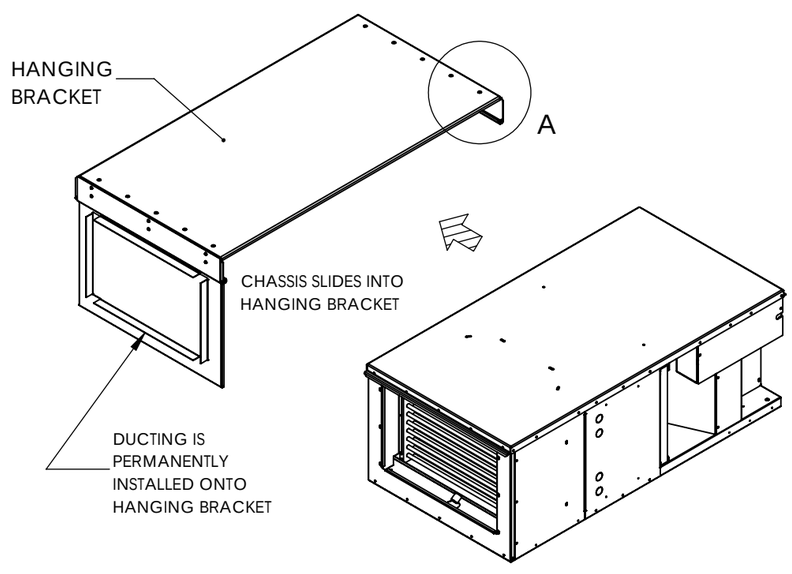

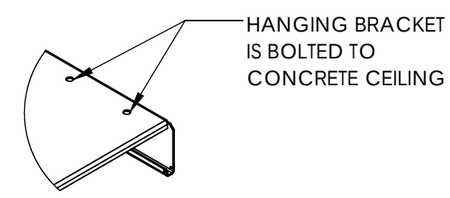

DETAIL A

BULLDOG HEAT PUMP

PROPRIETARY AND CONFIDENTIAL

THE INFORMATION CONTAINED IN THIS DRAWING IS THE SOLE PROPERTY OF CGC Group. ANY REPRODUCTION IN PART OR AS A WHOLE WITHOUT THE WRITTEN PERMISSION OF CGC Group IS PROHIBITED.

UNLESS OTHERWISE SPECIFIED:
DIMENSIONS ARE IN INCHES
TOLERANCES UNLESS OTHERWISE NOTED ARE:
FRACTIONAL Ñ1/16"
ANGULAR Ñ0.5Å
.X: Ñ.1"
.XX: Ñ.06"
.XXX: Ñ.032"
.XXXX: Ñ0050"

	NAME:	DATE (MM/DD/YYYY):
DRAWN:	C.S	09/18/2017
CHECKED:	F.L	09/18/2017
MATERIAL:		
FIINSH:		

PROJECT:

TITLE: SIDEWINDER CHASSIS

SIZE B | DWG. NO. SDW 008-015 DD | REV.: A

SCALE:NTS | WEIGHT: lbs | SHEET 1 OF 4

Last saved on: November-02-18; In the interest of continuous improvement, drawing subject to change without notice.

ECN/R #:

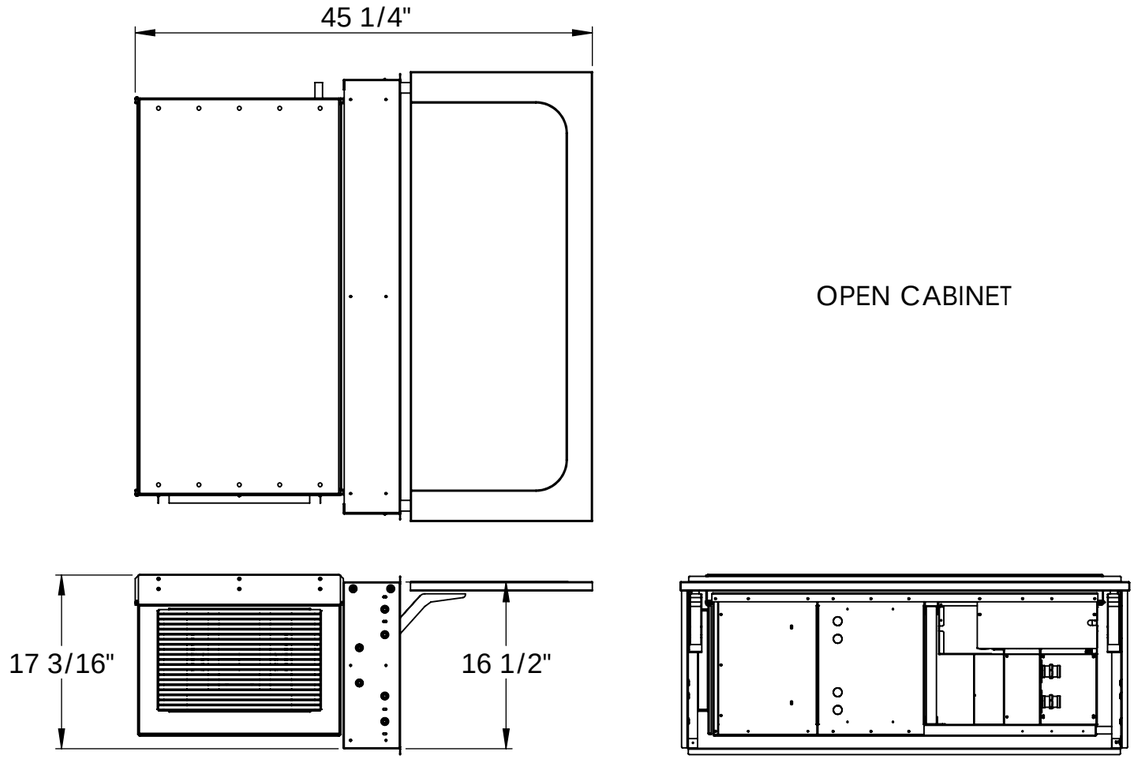

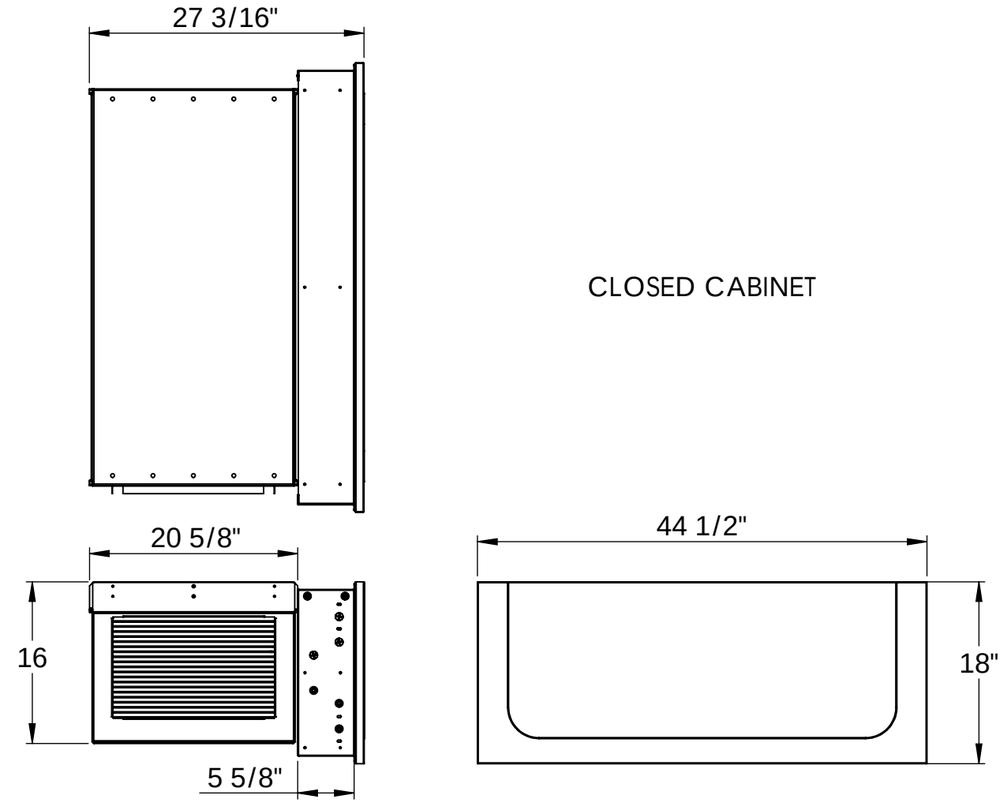

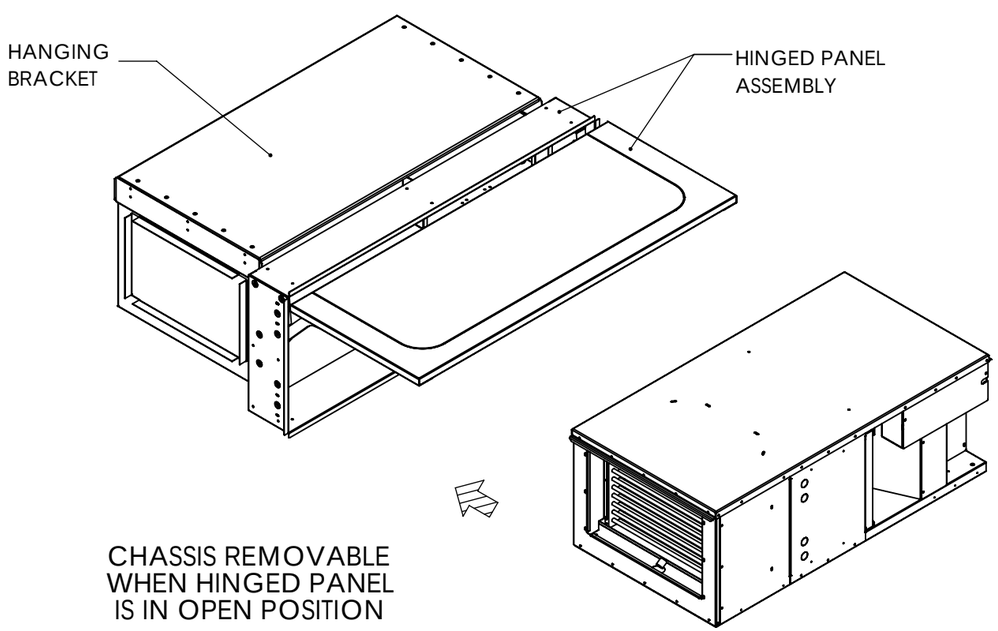

CHASSIS REMOVABLE
WHEN HINGED PANEL
IS IN OPEN POSITION

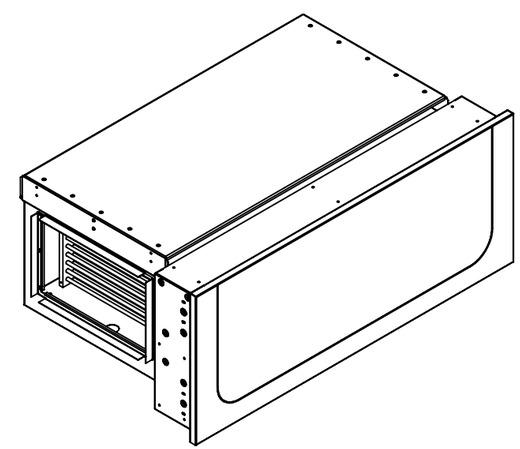

BULLDOG HEAT PUMP

PROPRIETARY AND CONFIDENTIAL

THE INFORMATION CONTAINED IN THIS DRAWING IS THE SOLE PROPERTY OF CGC Group. ANY REPRODUCTION IN PART OR AS A WHOLE WITHOUT THE WRITTEN PERMISSION OF CGC Group IS PROHIBITED.

UNLESS OTHERWISE SPECIFIED:
~~DIMENSIONS ARE IN INCHES~~
TOLERANCES UNLESS OTHERWISE NOTED ARE:
FRACTIONAL Ñ1/16"
ANGULAR Ñ0.5Å
.X: Ñ.1"
.XX: Ñ.06"
.XXX: Ñ.032"
.XXXX: Ñ0050"

	NAME:	DATE (MM/DD/YYYY):
DRAWN:	C.S	12/14/2017
CHECKED:	F.L	12/14/2017
MATERIAL:		
FIINSH:		

PROJECT:

TITLE: SIDEWINDER CABINET

SIZE B | DWG. NO. SDW 008-015 DD | REV.: A

SCALE: NTS | WEIGHT: lbs | SHEET 2 OF 4

Last saved on: November-02-18; In the interest of continuous improvement, drawing subject to change without notice.