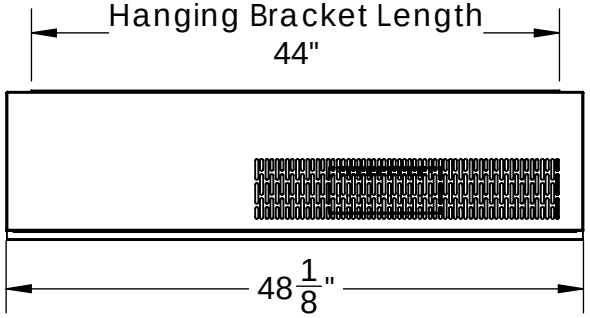

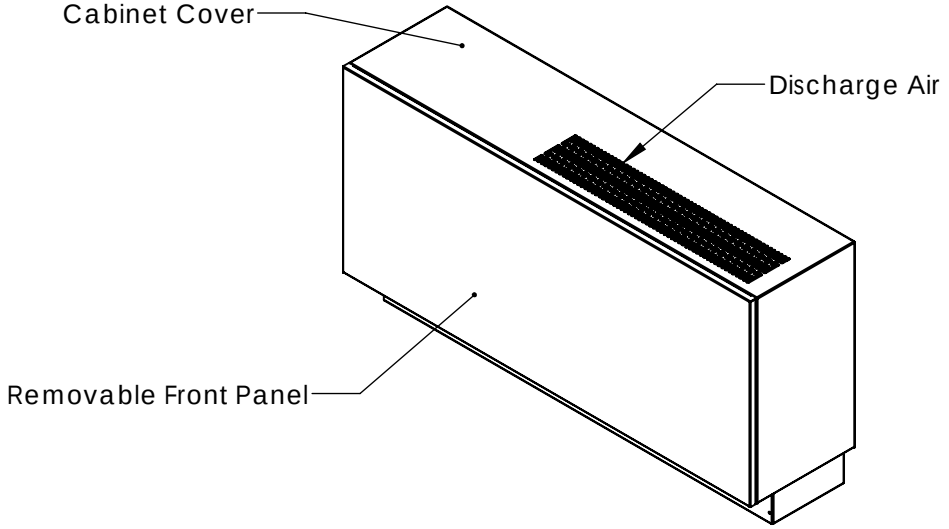

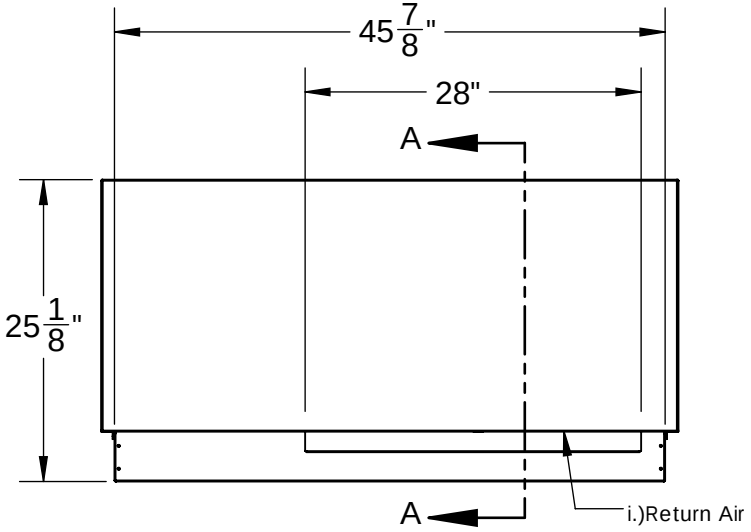

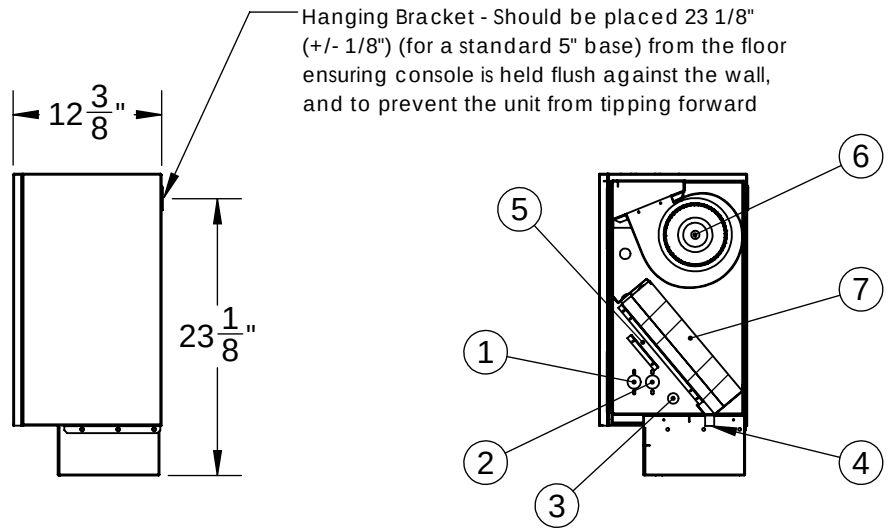

SECTION A-A

ii.) Base Opening to provide sufficient spacing for contractor to connect Building Water In/Out Connections on Units

REMARKS:
- Disposable Filter included (29.5" X 1" X11")

1. WATER IN 1/2" FPT
2. WATER OUT 1/2" FPT
3. POWER CORD ACCESS
4. CONDENSATE DRAIN 3/4" ID HOSE
5. Filter Location
6. Fan Housing
7. HW and DX Coil

{LJI·ŎŜYŜŜLJŜŃ /ƻyãƻfŜ ó{Y/ ллуπлмрύ

5 ² DY /{ окфкнлму
! t twY C[окфкнлму

BULLDOG HEAT PUMP

bƻ ƻǘKŜŃ KŜI·ǘ LJdzYLJ ŘƻŜǎ YƻŃŜΣ ǿƛǘK fŜǎǎΦ

ϭ /ƻLJèŃƛƎKǘ нлму /D/ DŃƻdzLJ LyŎΦ